BANDED DOUBLE GLAZING

ELEVATION
SCALE 1:25 @ A2

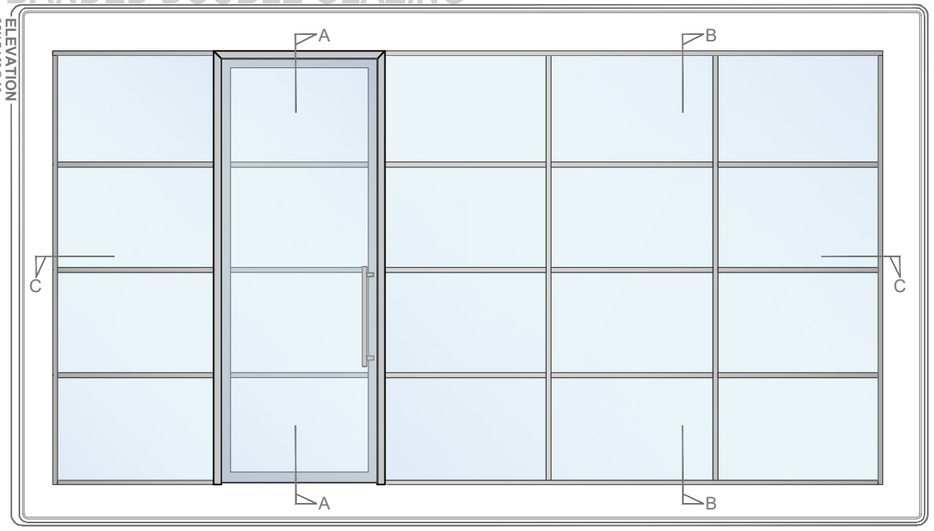

SECTION A-A

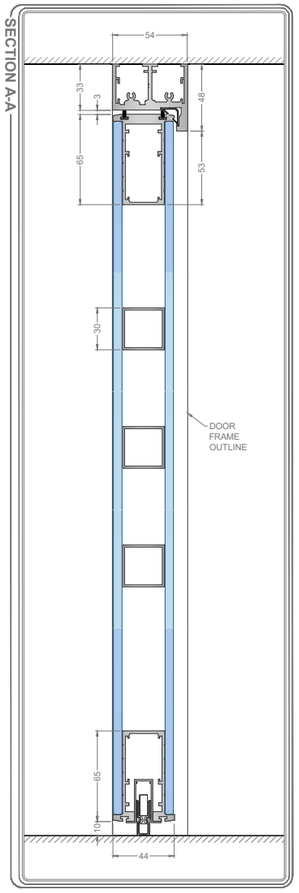

SECTION B-B

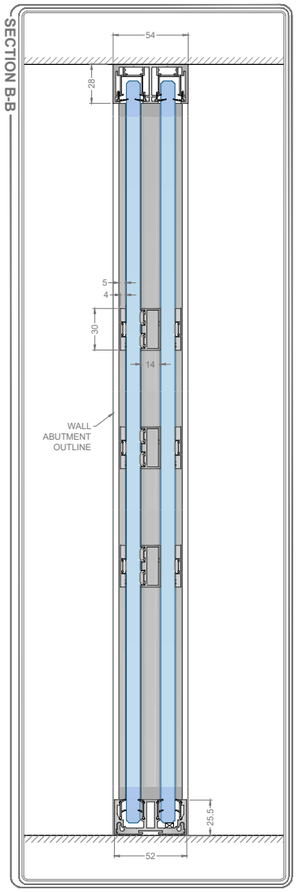

SECTION C-C

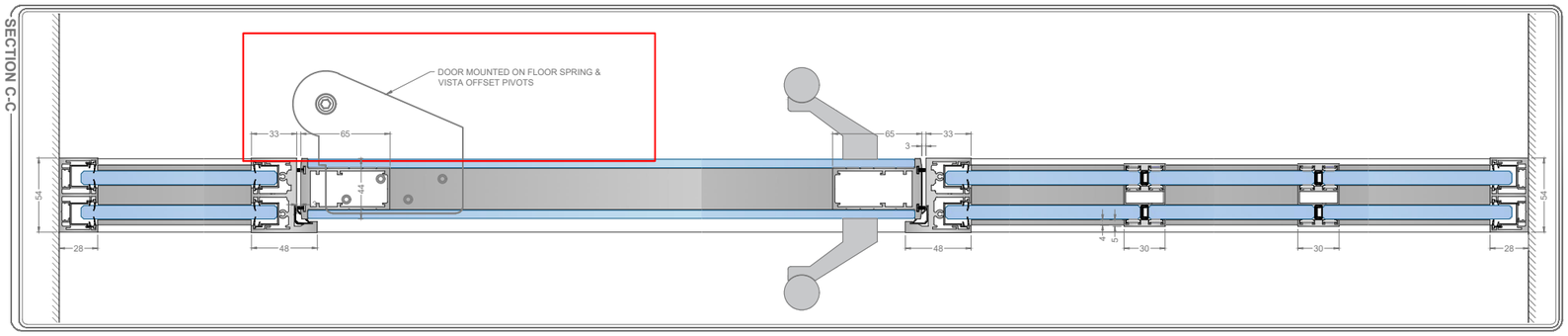

Drawing Title: Banded Fineline Double Glazed Partition	FusionPartitions Unit 6, I O Centre, Salbrook Road Industrial Estate, Salfords, Surrey, RH1 5GJ T: +44 (0)1293 220970 E: info@fusionpartitions.com	Aluminium Glass Steel Gasket Timber Insulation Plasterboard Glazing Packer	Client Project
Scale @ A2: 1:3 unless stated Drawn by: SB Checked: - Date: 30/06/20 Drawing no. Rev. -			

Do not scale this drawing (printed or electronic versions).

This drawing is copyright

Discrepancies and/or ambiguities within this drawing, between drawings and between drawings and specifications, must be immediately to the office for clarification before proceeding.

All works to be carried out in accordance with the latest British Standards/Codes of Practice unless specifically directed otherwise in the specification.

Responsibility for the reproduction of this drawing in paper or electronic formats rests with the user. It is the user's responsibility to check that all information has been replicated in full and is correct when compared to the original paper or electronic image.

Graphical representations of details on this drawing have been co-ordinated, but are approximations only. Please refer to Specifications and / or Details for actual sizes.